Simplified Form of Recurrent Neural Networks for Predicting Alzheimer Disease Progression

Sayantan Kumar,[1]; Aditi Gupta, PhD[1]; Inez Oh, PhD[1]; Suzanne Schindler, MD,PhD[2];
Albert M. Lai, PhD[1]; Philip R.O. Payne, PhD[1]
[1]Institute for Informatics, Washington University School of Medicine, St. Louis, Missouri, USA
[2]Department of Neurology, Washington University School of Medicine, St. Louis, Missouri, USA

Introduction and Data

- Alzheimer Disease (AD) is the most common cause of dementia. **With no available cure, it is the sixth leading cause of death in the United States.**
- **Analyzing AD disease course in individuals** is key for implementing personalized therapeutic strategies to delay disease progression.
- Longitudinal data extracted from electronics health records (EHR) consists of **varying number of visits per patient** and **non-uniform time intervals between visits**, which resulted in the failure of traditional time series methods and machine learning models to accurately predict AD progression in individuals.
- We applied a **simplified form of recurrent neural networks** (RNN) to predict the **progression of AD markers and clinical diagnosis up to 6 years into the future** by leveraging the **temporal and medical patterns inherent to a patient's previous visits**.

Outpatient electronic health records data from:

- June 1st 2013 - May 31st 2018
- Barnes-Jewish Hospital, a large tertiary-referral academic medical center in St. Louis, MO

Longitudinal data from **1193 patients** with **3676 visits** (mean = 3.08 +/- 1.15)

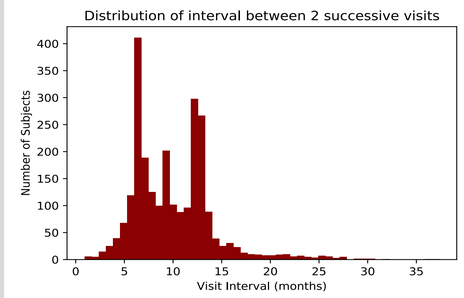

Figure 1: Distribution of number of months between 2 successive visits.

Table 1: List of features used. **Clinical diagnosis refers to analytical grouping in Table 2**

Features	Mean score +/- std	Completeness (% timepoints)
Boston Naming Test	12.2 +/- 2.92	96.74
Logical Memory	3.6 +/- 3.22	95.46
Mini-Mental Status Exam	20.65 +/- 5.78	99.51
Short Blessed	13.54 +/- 8.3	98.61
Verbal Fluency	10.78 +/- 4.8	90.94
Word List Memory Task	10.92 +/- 10.09	87.3
Word List Recall	1.72 +/- 2.03	84.93
Clinical diagnosis	-	45.02

Table 2: Clinical diagnosis determined by Clinical Dementia Rating (CDR) score*.

CDR	Dementia severity	Analytical grouping	Number of timepoints
0	Cognitively Normal	Normal/Very Mild Dementia	8
0.5	Very Mild Dementia		554
1	Mild Dementia	Mild Dementia	761
2	Moderate Dementia	Moderate/Severe Dementia	315
3	Severe Dementia		17

* https://knightadrc.wustl.edu/CDR/CDR.htm

Methods

- **MinimalRNN**[1] architecture used to predict AD progression (Figure 2).
  - Advantage over LSTM/GRU - fewer parameters, less likely to overfit.
- Data imputation strategies :
  - **Linear filling** - linear interpolation between previous and next observed timepoint with available data
  - **Model filling**[2] - using MinimalRNN predictions during training and testing (Figure 3).
- Cross validation: Data randomly divided **10 times** into training (80%), and test (20%) sets. 1st half of timepoints was used to predict the 2nd half of timepoints for each test subject. (Figure 4)
- Compared performance of MinimalRNN against LSTM (Long Short Term Memory Networks) using Multiclass Area Under the Receiver Operating Characteristics Curve (MAUROC) for clinical diagnosis and Mean Absolute Error (MAE) for the neurobehavioral status exam scores.

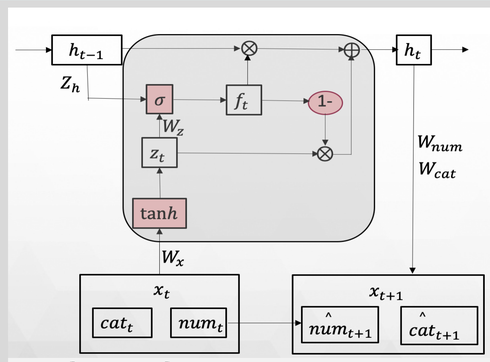

$$x_t = [cat_t, num_t]$$
$$z_t = \tanh(W_x x_t)$$
$$f_t = \sigma(Z_h h_{t-1} + W_z z_t)$$
$$h_t = f_t \odot h_{t-1} + (1 - f_t) \odot z_t$$
$$\hat{cat}_{t+1} = softmax(W_{cat} h_t)$$
$$\hat{num}_{t+1} = W_{num} h_t + num_t$$

Figure 2: MinimalRNN architecture and its update equations. num_t and cat_t represent the continuous and categorical variables at time t respectively. The model takes its previous state h_{t-1} and the encoded input z_t and outputs a weighted average of both depending on the forget gate f_t .

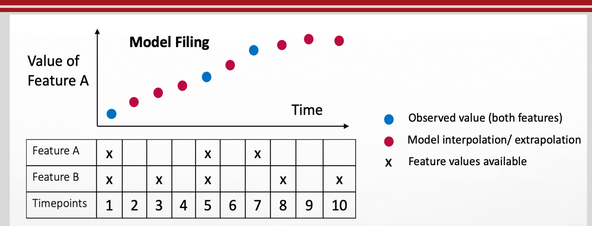

Figure 3: Model-filling imputes missing values using model predictions. For example, both features A and B at time $t = 1$ were used by the model to predict both input features at time $t = 2$.

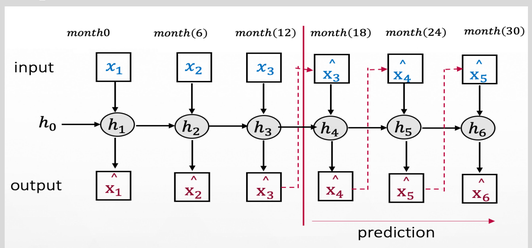

$$Loss = \sum_{t>0}^{T} \left(CrossEntropy\left(cat_t, \hat{cat}_t\right) + MAE\left(num_t, \hat{num}_t\right) \right)$$
$$CrossEntropy\left(cat_t, \hat{cat}_t\right) = -\sum_{j=1}^{numClass} cat_t^{\,j} \log\left(\hat{cat}_t^{\,j}\right)$$
$$MAE\left(num_t, \hat{num}_t\right) = \frac{1}{numVar} \sum_{j=1}^{numVar} \left| num_t^{\,j} - \hat{num}_t^{\,j} \right|$$

Figure 4: Predicting future timepoints ($\hat{x}_4$, $\hat{x}_5$, $\hat{x}_6$, etc.) given three initial timepoints (x_1, x_2, and x_3). $\hat{x}_3, \hat{x}_4$ and $\hat{x}_5$ were used as inputs (timepoints 4, 5 and 6 to predict further into the future.

Results and Discussion

Table 3: Performance of MinimalRNN and LSTM for both model filling and linear filling, **averaged across 10 test sets.** For clinical diagnosis, higher MAUROC values indicate better performance. For Boston Naming Test and Logical Memory, lower MAE indicates better performance. **The 1st and 2nd best model for each for the metrics are highlighted in red and blue respectively. The last row (δ) shows the difference between the 1st and the 2nd ranked models for each metric.** MinRNN-MF = MinimalRNN with model filling, MinRNN-LF = MinimalRNN with linear filling, LSTM-MF = LSTM with model filling, LSTM-LF = LSTM with linear filling.

Model	Clinical Diagnosis MAUROC (higher = better)	Boston Naming Test MAE (lower = better)	Logical Memory MAE (lower = better)	Mini-Mental State Exam MAE (lower = better)
MinRNN-MF	0.7474	1.4014	1.8279	3.1934
MinRNN-LF	0.7396	2.0781	3.1181	4.4825
LSTM-MF	0.704	1.4393	1.8359	3.2141
LSTM-LF	0.7186	2.2295	3.48451	4.8081
δ	0.0078	0.0379	0.008	0.0207

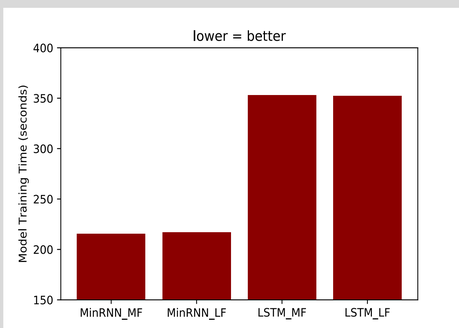

Figure 5: Training time for all the 4 models. **MinRNN had a ~1.6X faster model training time than LSTM.**

- We focused on predicting the progression of AD markers and clinical diagnosis up to **6 years into the future** using a modified form of traditional RNN architecture.
- **With simplified update equations and fewer parameters, MinimalRNN performs on par with LSTM and has a a ~1.6X faster model training time.** (Figure 5)
- Imputation of missing data using *model filling* method yielded **better** performance than *linear filing*. (Table 3)
- Relatively low values of MAUROC for predicting clinical diagnosis possibly due to **small number of clinical features and training samples.**
- Future analyses include (a) **incorporating more clinical features** like vitals signs, laboratory tests, comorbidities, biomarkers, etc. (b) **ablation analysis** – interpret the importance of each clinical feature and model component.

References

1. Chen, Minmin. "MinimalRNN: Toward more interpretable and trainable recurrent neural networks." Interpretable ML Symposium, 31st Conference on Neural Information Processing Systems (NIPS 2017), Long Beach, CA, USA.
2. Minh Nguyen, Tong He, Lijun An, Daniel C. Alexander, Jiashi Feng, B.T. Thomas Yeo, Predicting Alzheimer's disease progression using deep recurrent neural networks, NeuroImage, Volume 222, 2020. https://doi.org/10.1016/j.neuroimage.2020.117203.